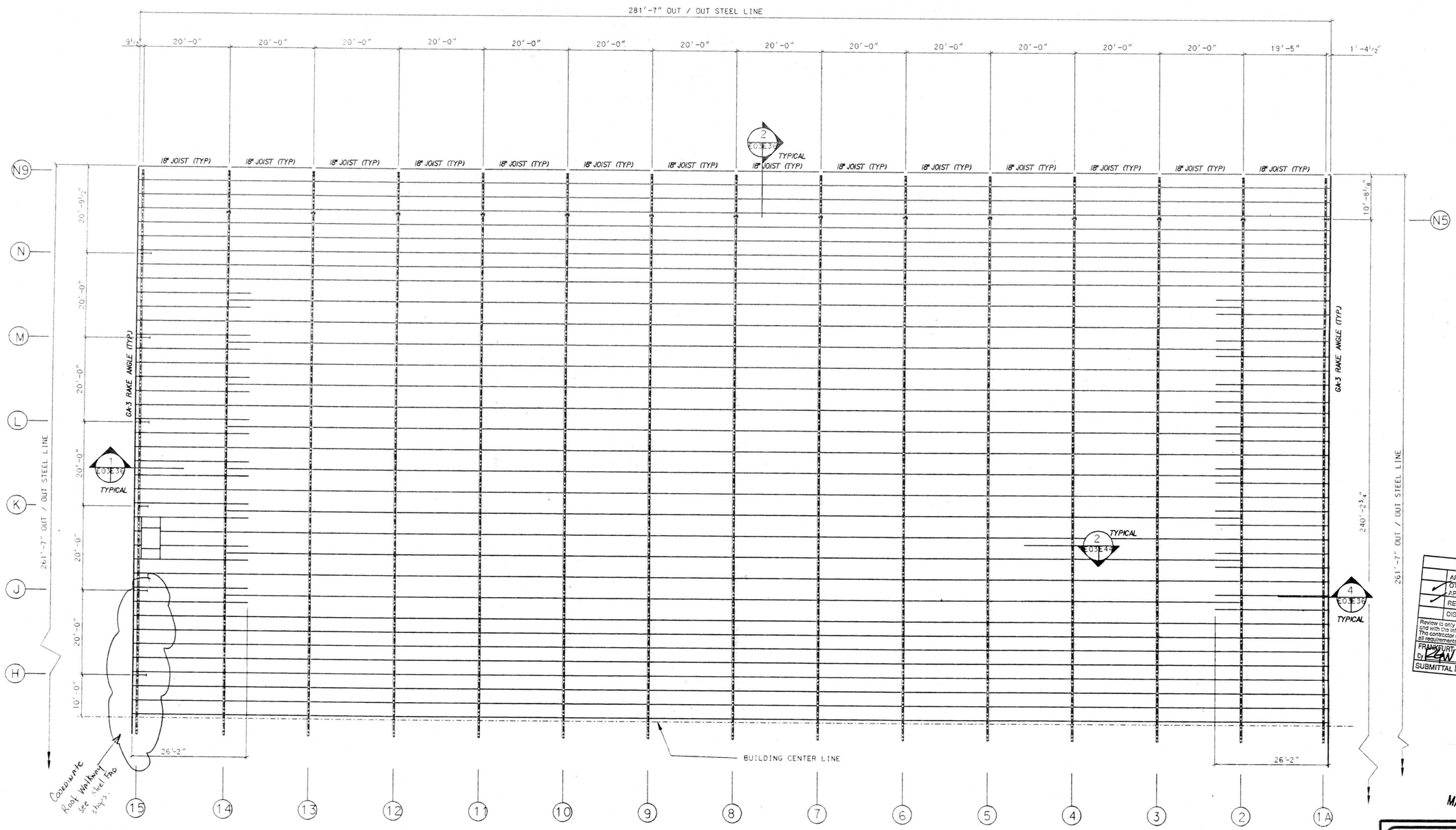

PARTIAL ROOF JOIST FRAMING PLAN

Define Bar-Joist Bridging Requirements and Installation Methods on Shop Dwgs.

REFER TO SHEET E-01 & E-02 FOR BALANCE OF ROOF FRAMING / SECONDARY MEMBER PLAN
REFER TO SHEET E-04 FOR PARTIAL ROOF JOIST LAY-OUT AND PLAN
REFER TO SHEET E-05 & E-06 FOR PARTIAL PRIMARY MEMBER / TOP CHORD BRACING PLAN
REFER TO SHEET E-07 & E-08 FOR PARTIAL BOTTOM CHORD BRACING PLAN
REFER TO SHEET E-43 & E-44 FOR ADDITIONAL TYPICAL DETAILS

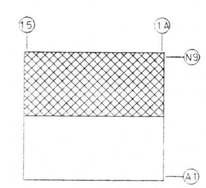

KEY PLAN

NO.	REVISION	MADE	CHK'D	DATE
A	FOR APPROVAL	LMC		3/94
B	REVISED FOR APPROVAL	LMC		3/94
		LIL	85330	

SUBMITTAL REVIEW
APPROVED
OTHER:
APPROVED AS NOTED
RETURN FOR RESUBMITTAL
DISAPPROVED - SEE REMARKS
Review is only for conformance with the design concept and with the information given in the contract documents. The contractor remains responsible for compliance with all requirements of the contract documents.
FRANKFURT • SHORT • BRADY ASSOCIATES, P.C.
BY: RAW Date: APR 26 1994
SUBMITTAL NO: S-9126-1312OA-01-02

STATE OF ALASKA 49TH
CHANDER P. HANGIA
CE 4848
REGISTERED PROFESSIONAL ENGINEER
MAR 24 1994

AMERICAN BUILDINGS COMPANY
Heavy Fabrication Division
Bellaire, Texas

© Copyright 1994
American Buildings Company
All Rights Reserved

Builder: Seattle Construction Services, Inc.
Owner: Alaska Industrial Development and Export Authority
Building: Line Maintenance Hangar
Location: Anchorage, Alaska

DRAWN BY	LMC	JOB NO.	51-9290
CHECKED BY		DATE 2/94	DWG. E-03

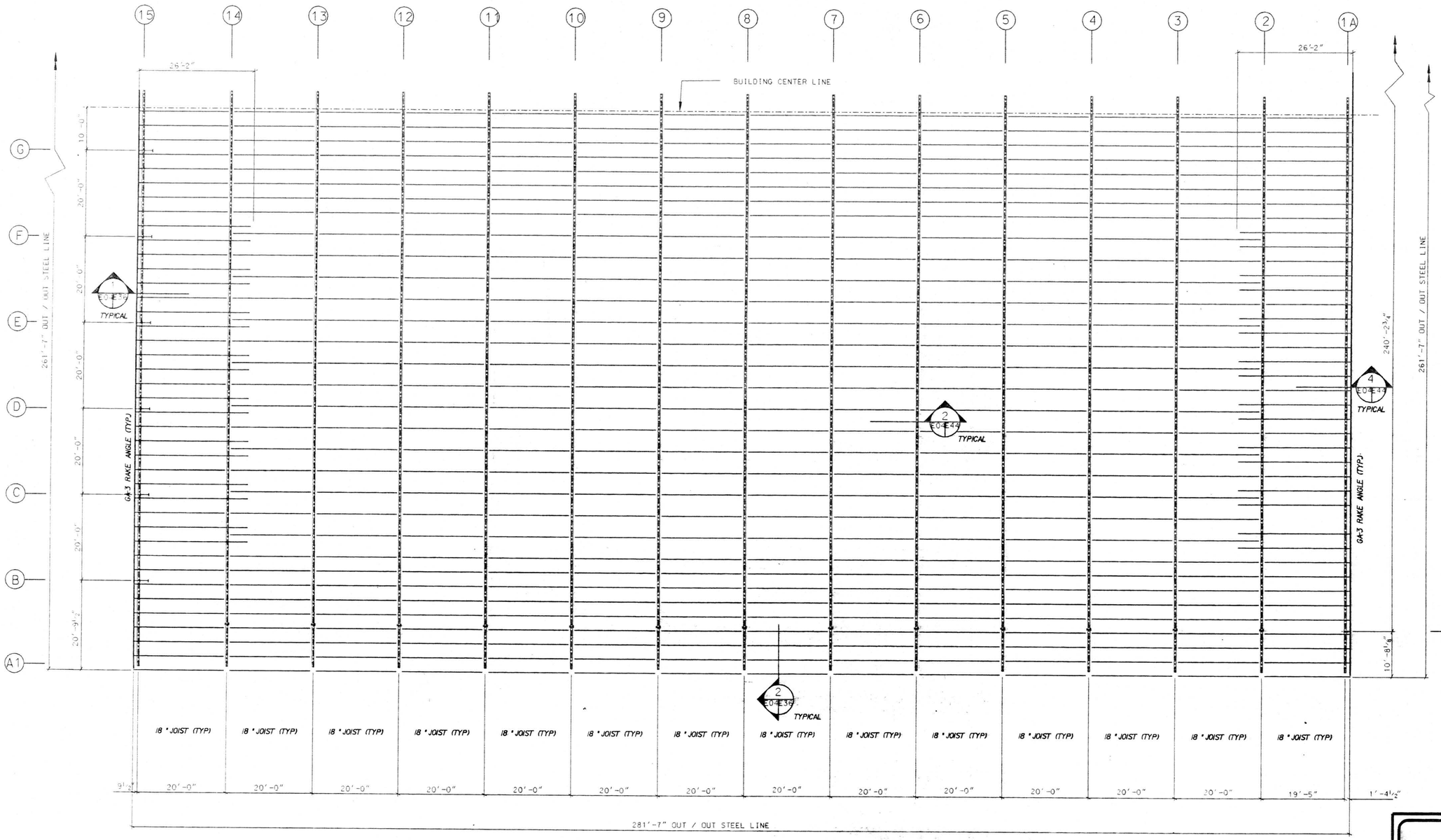

PARTIAL ROOF JOIST FRAMING PLAN

Define Bar-Joist Bridging Requirements and Installation Methods on Shop Dwgs

REFER TO SHEET E-01 & E-02 FOR BALANCE OF ROOF FRAMING / SECONDARY MEMBER PLAN
REFER TO SHEET E-03 FOR PARTIAL ROOF JOIST LAY-OUT AND PLAN
REFER TO SHEET E-05 & E-06 FOR PARTIAL PRIMARY MEMBER / TOP CHORD BRACING PLAN
REFER TO SHEET E-07 & E-08 FOR PARTIAL BOTTOM CHORD BRACING PLAN
REFER TO SHEET E-43 & E-44 FOR ADDITIONAL TYPICAL DETAILS

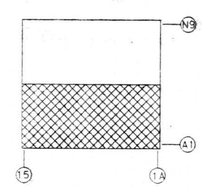

KEY PLAN

NO.	REVISION	MADE	CHK'D	DATE
A	FOR APPROVAL	LMC		3/94
B	REVISED FOR APPROVAL	LMC		3/94
		LIL	85331	

SUBMITTAL REVIEW

- APPROVED
- ✓ OTHER: APPROVED AS NOTED
- ✓ RETURN FOR RESUBMITTAL
- DISAPPROVED - SEE REMARKS

Review is only for conformance with the design concept and with the information given in the contract documents. The contractor remains responsible for compliance with all requirements of the contract documents.

FRANKFURT • SHORT • BRUZA ASSOCIATES, P.C.
By [illegible] Date APR 26 1994
SUBMITTAL NO. S-9126-1312DA-0202

STATE OF ALASKA 49TH
CHANDER P. MANGIAT
CE 4640
REGISTERED PROFESSIONAL ENGINEER
MAR 24 1994

AMERICAN BUILDINGS COMPANY
Heavy Fabrication Division
Bellaire, Texas

© Copyright 1994
American Buildings Company
All Rights Reserved

Builder: Seattle Construction Services, Inc.
Owner: Alaska Industrial Development and Export Authority
Building: Line Maintenance Hangar
Location: Anchorage, Alaska

DRAWN BY	LMC	JOB NO.	51-9290
CHECKED BY		DATE 2/94	DWG. E-04

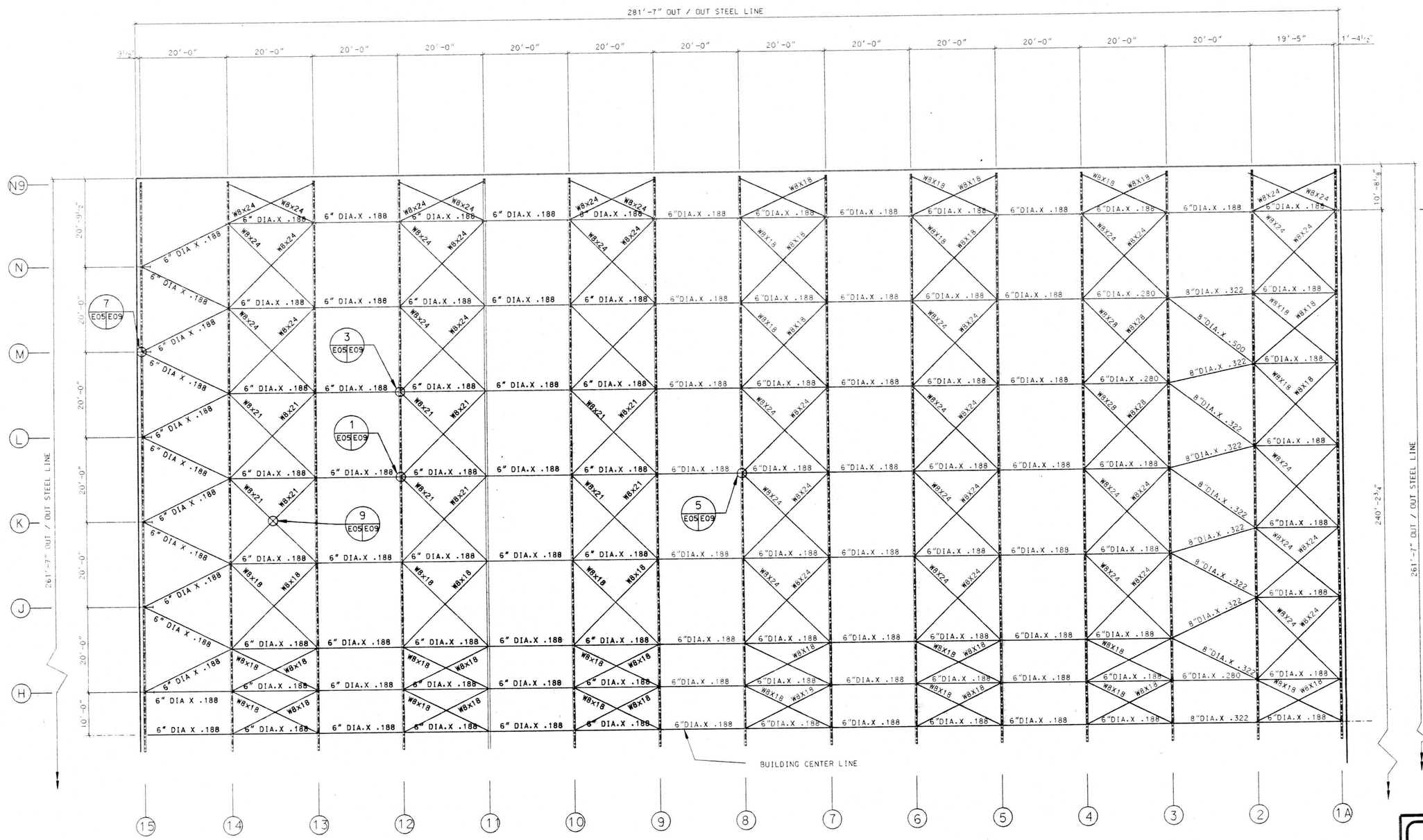

PARTIAL ROOF TOP CHORD BRACING PLAN

REFER TO SHEET E-01 & E-02 FOR BALANCE OF ROOF FRAMING / SECONDARY MEMBER PLAN
REFER TO SHEET E-03 & E-04 FOR PARTIAL ROOF JOIST LAY-OUT AND PLAN
REFER TO SHEET E-06 FOR PARTIAL PRIMARY MEMBER / TOP CHORD BRACING PLAN
REFER TO SHEET E-07 & E08 FOR PARTIAL BOTTOM CHORD BRACING PLAN

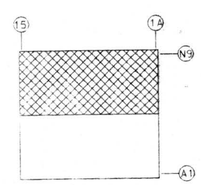

KEY PLAN

NO.	REVISION	MADE	CHK'D	DATE
A	FOR APPROVAL	LMC		3/94

LIL 85332

SUBMITTAL REVIEW

- APPROVED
- OTHER:
- ✓ APPROVED AS NOTED
- RETURN FOR RESUBMITTAL
- DISAPPROVED - SEE REMARKS

Review is only for conformance with the design concept and with the information given in the contract documents. The contractor remains responsible for compliance with all requirements of the contract documents.

FRANKFURT • SHORT • BRUZA ASSOCIATES, P.C.
By KAW Date APR 26 1994
SUBMITTAL NO. 95-126-520A-02-02

STATE OF ALASKA 49TH
CHANDER P. HANJAJ
CE 4640
REGISTERED PROFESSIONAL ENGINEER

MAR 24 1994

AMERICAN BUILDINGS COMPANY
Heavy Fabrication Division
Bellaire, Texas

© Copyright 1994
American Buildings Company
All Rights Reserved

Builder: Seattle Construction Services, Inc.
Owner: Alaska Industrial Development and Export Authority
Building: Line Maintenance Hangar
Location: Anchorage, Alaska

DRAWN BY	LMC	JOB NO.	51-9290
CHECKED BY		DATE 2/94	DWG. E-05

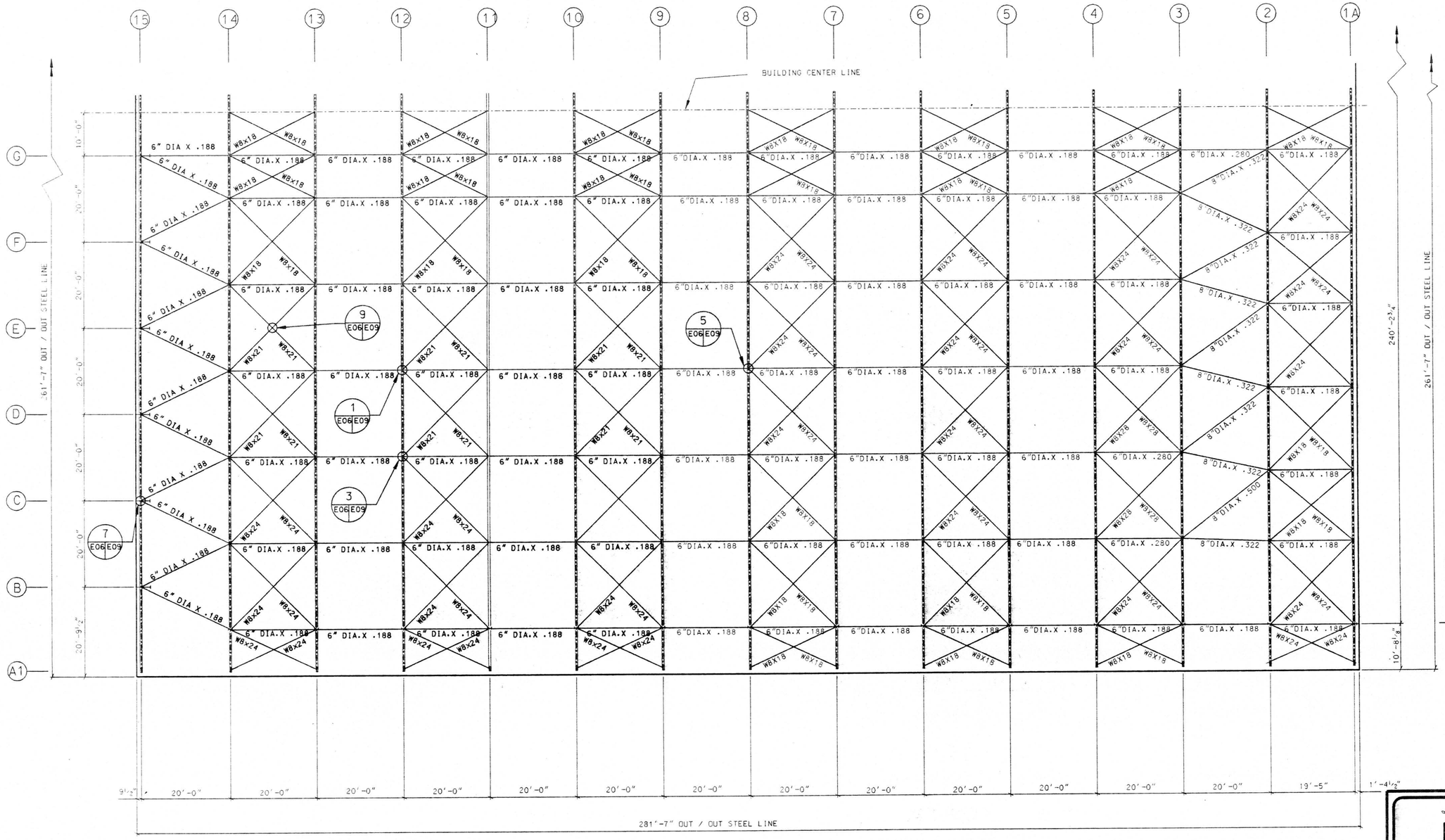

PARTIAL ROOF TOP CHORD BRACING PLAN

REFER TO SHEET E-01 & E-02 FOR BALANCE OF ROOF FRAMING / SECONDARY MEMBER PLAN

REFER TO SHEET E-03 & E-04 FOR PARTIAL ROOF JOIST LAY-OUT AND PLAN

REFER TO SHEET E-05 FOR PARTIAL PRIMARY MEMBER / TOP CHORD BRACING PLAN

REFER TO SHEET E-07 & E-08 FOR PARTIAL BOTTOM CHORD BRACING PLAN

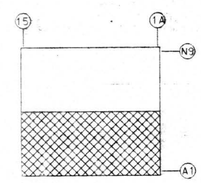

KEY PLAN

NO.	REVISION	MADE	CHK'D	DATE
A	FOR APPROVAL	LMC		3/94
		LIL	85333	

SUBMITTAL REVIEW

- APPROVED
- ✓ OTHER: APPROVED AS NOTED
- ✓ RETURN FOR RESUBMITTAL
- DISAPPROVED - SEE REMARKS

Review is only for conformance with the design concept and with the information given in the contract documents. The contractor remains responsible for compliance with all requirements of the contract documents.

FRANKFURT • SHORT • BRUZA ASSOCIATES, P.C.
By KSW Date APR 28 1994
SUBMITTAL NO. 9126-13120A-OP-02

STATE OF ALASKA 49TH CHANDER P. NANJIA CE 4640 REGISTERED PROFESSIONAL ENGINEER

MAR 24 1994

AMERICAN BUILDINGS COMPANY
Heavy Fabrication Division
Bellaire, Texas

© Copyright 1994
American Buildings Company
All Rights Reserved

Builder: Seattle Construction Services, Inc.

Owner: Alaska Industrial Development and Export Authority

Building: Line Maintenance Hangar
Location: Anchorage, Alaska

DRAWN BY	LMC	JOB NO.	51-9290
CHECKED BY		DATE 2/94	DWG. E-06

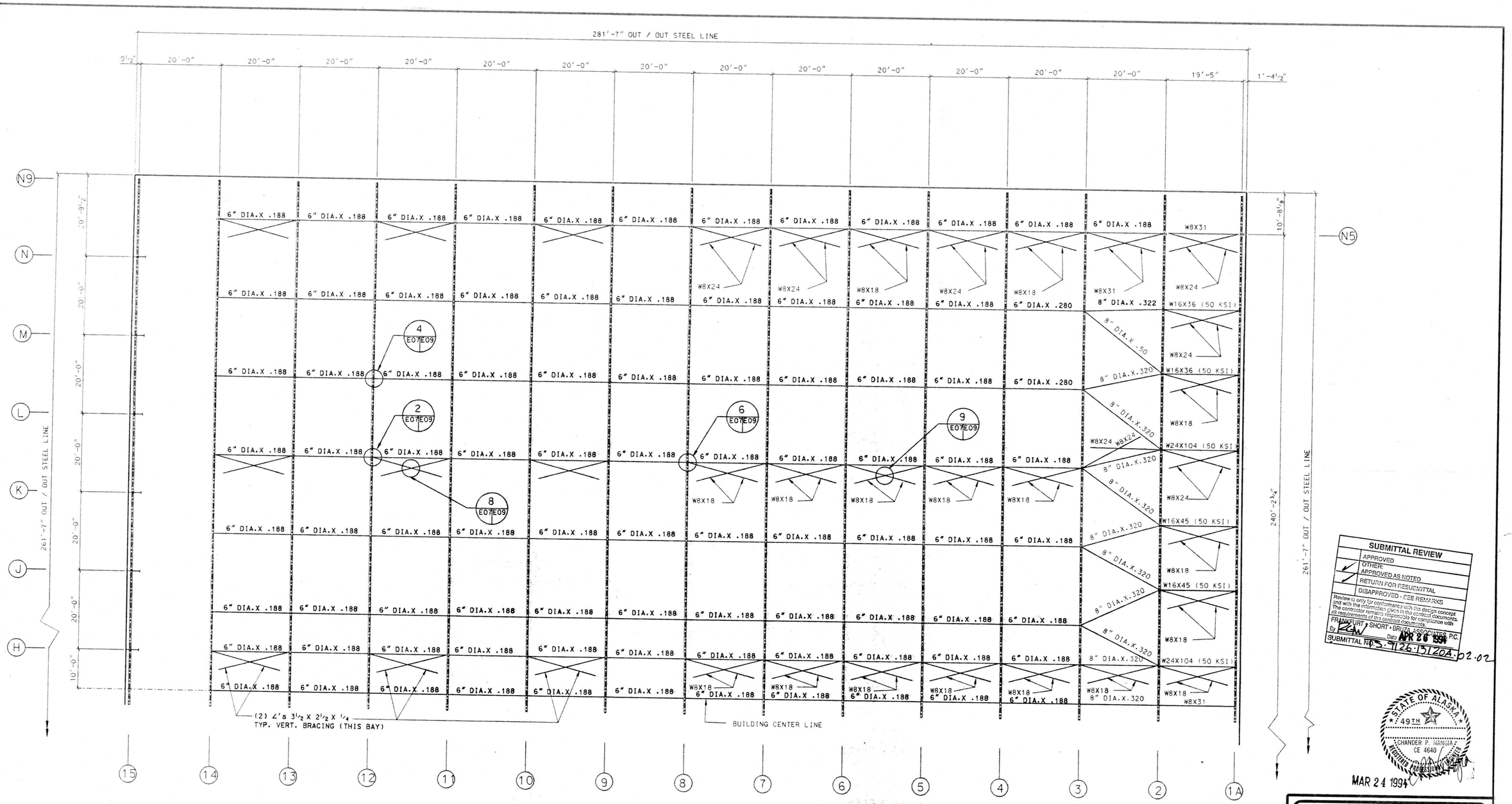

SUBMITTAL REVIEW
APPROVED
OTHER:
APPROVED AS NOTED
RETURN FOR RESUBMITTAL
DISAPPROVED - SEE REMARKS
Review is only for conformance with the design concept and with the information given in the contract documents. The contractor remains responsible for compliance with all requirements of the contract documents.
FRANKFURT • SHORT • BRUCE ASSOCIATES P.C.
By Date APR 26 1994
SUBMITTAL NO. 5-1126-13120A-02.02

STATE OF ALASKA
49TH
CHANDER P. HANGA
CE 4640
REGISTERED PROFESSIONAL ENGINEER
MAR 24 1994

PARTIAL ROOF BOTTOM CHORD BRACING PLAN

REFER TO SHEET E-01 & E-02 FOR BALANCE OF ROOF FRAMING / SECONDARY MEMBER PLAN
REFER TO SHEET E-03 & E-04 FOR PARTIAL ROOF JOIST LAY-OUT AND PLAN
REFER TO SHEET E-05 & E-06 FOR PARTIAL PRIMARY MEMBER / TOP CHORD BRACING PLAN
REFER TO SHEET E08 FOR PARTIAL BOTTOM CHORD BRACING PLAN

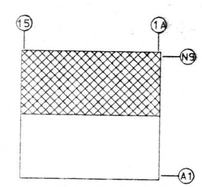

KEY PLAN

NO.	REVISION	MADE	CHK'D	DATE
A	FOR APPROVAL	LMC		3/94
B	REVISED FOR APPROVAL	LMC		3/94

LIL 85334

AMERICAN BUILDINGS COMPANY
Heavy Fabrication Division
Bellaire, Texas

© Copyright 1994
American Buildings Company
All Rights Reserved

Builder: Seattle Construction Services, Inc.
Owner: Alaska Industrial Development and Export Authority
Building: Line Maintenance Hangar
Location: Anchorage, Alaska

DRAWN BY	LMC	JOB NO.	51-9290
CHECKED BY		DATE 2/94	DWG. E-07

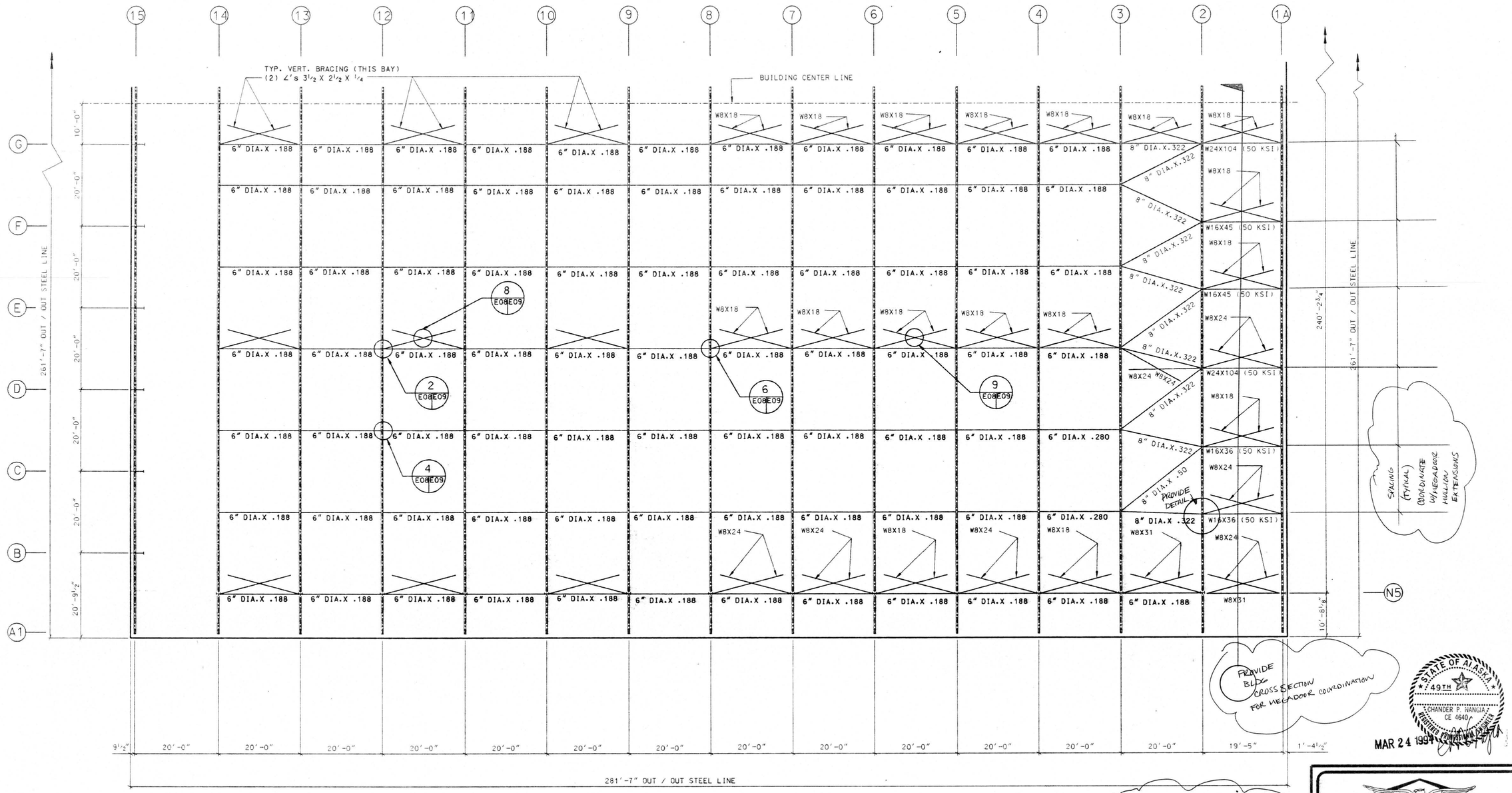

DIAGONAL BRACING: HORIZONTALLY @ 3/12 PITCH PLANE

PARTIAL ROOF BOTTOM CHORD BRACING PLAN

REFER TO SHEET E-01 & E-02 FOR BALANCE OF ROOF FRAMING / SECONDARY MEMBER PLAN
REFER TO SHEET E-03 & E-04 FOR PARTIAL ROOF JOIST LAY-OUT AND PLAN
REFER TO SHEET E-05 & E-06 FOR PARTIAL PRIMARY MEMBER / TOP CHORD BRACING PLAN
REFER TO SHEET E-07 FOR PARTIAL BOTTOM CHORD BRACING PLAN

SUBMITTAL REVIEW

- APPROVED
- OTHER:
- ✓ APPROVED AS NOTED
- ✓ RETURN FOR RESUBMITTAL
- DISAPPROVED - SEE REMARKS

Review is only for conformance with the design concept and with the information given in the contract documents. The contractor remains responsible for compliance with all requirements of the contract documents.

FRANKFURT • SHORT • BRUZA ASSOCIATES, P.C.
By KAN Date APR 26 1994
SUBMITTAL No. 05-9126-13/20A-02-02

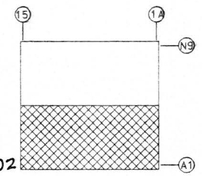

KEY PLAN

NO.	REVISION	MADE	CHK'D	DATE
A	FOR APPROVAL	LMC		3/94
B	REVISED FOR APPROVAL	LMC		3/94
		LIL	85335	

AMERICAN BUILDINGS COMPANY
Heavy Fabrication Division
Bellaire, Texas

© Copyright 1994
American Buildings Company
All Rights Reserved

Builder: Seattle Construction Services, Inc.
Owner: Alaska Industrial Development and Export Authority
Building: Line Maintenance Hangar
Location: Anchorage, Alaska

DRAWN BY	LMC	JOB NO.	51-9290
CHECKED BY		DATE 2/94	DWG. E-08

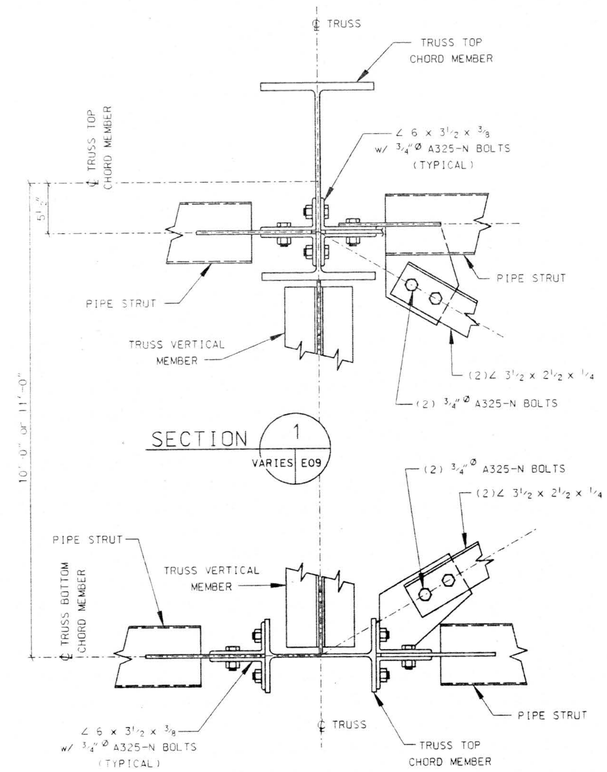

SECTION 2
VARIES E09

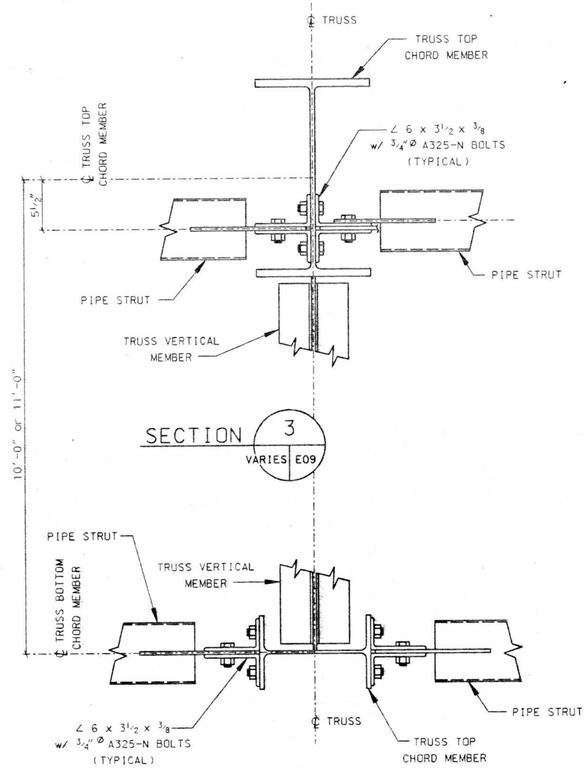

SECTION 4
VARIES E09

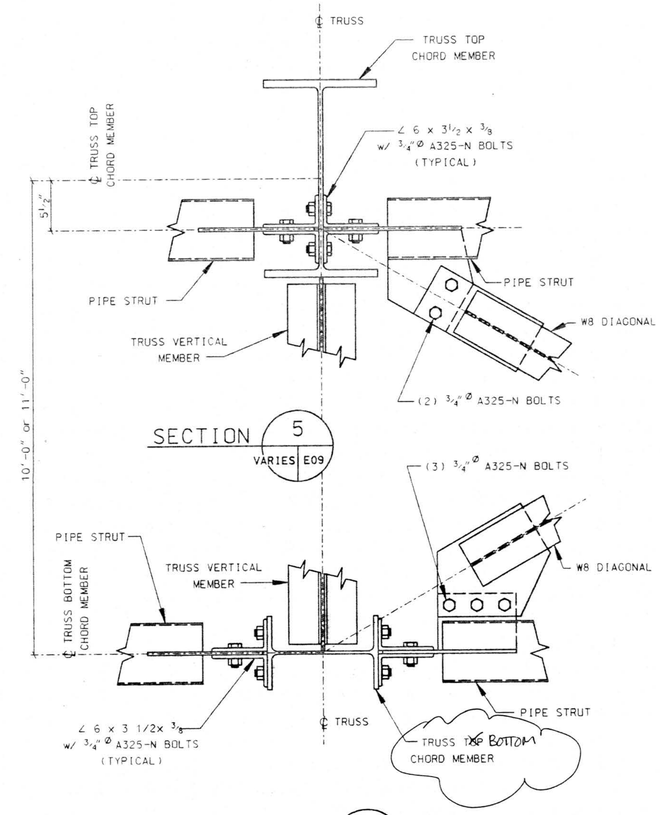

SECTION 6
VARIES E09

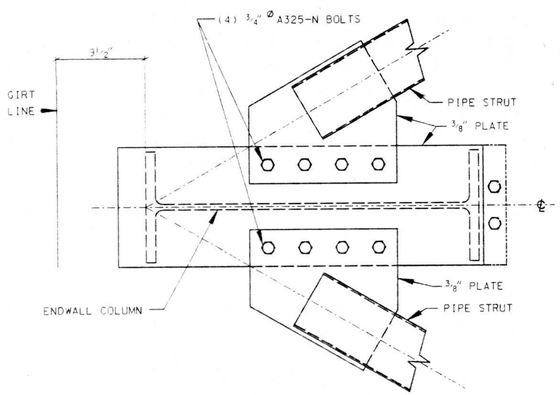

SECTION 7
VARIES E09

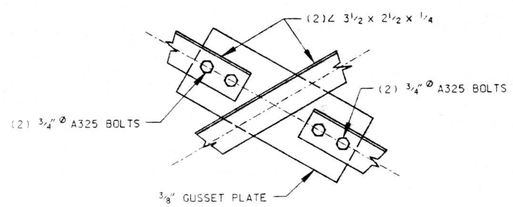

SECTION 8
VARIES E09

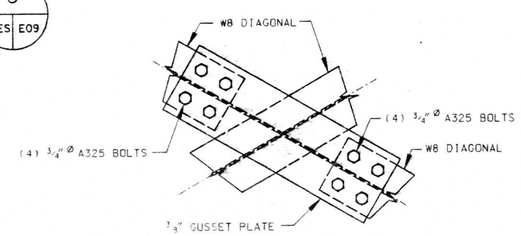

SECTION 9
VARIES E09

SUBMITTAL REVIEW

- APPROVED
- ✓ OTHER: APPROVED AS NOTED
- ✓ RETURN FOR RESUBMITTAL
- DISAPPROVED - SEE REMARKS

Review is only for conformance with the design concept and with the information given in the contract documents. The contractor remains responsible for compliance with all requirements of the contract documents.

FRANKFURT • SHORT • DRAPER & ASSOCIATES, P.C.
By LGW Date APR 20 1994
SUBMITTAL NO. S-126-131-20A-02-02

STATE OF ALASKA 49TH CHANDER P. HANJA CE 4640 REGISTERED PROFESSIONAL ENGINEER
MAR 24 1994

NO.	REVISION	MADE	CHK'D	DATE
A	FOR APPROVAL	LMC		3/94
		LIL	85336	

AMERICAN BUILDINGS COMPANY
Heavy Fabrication Division
Bellaire, Texas

© Copyright 1994
American Buildings Company
All Rights Reserved

Builder: Seattle Construction Services, Inc.
Owner: Alaska Industrial Development and Export Authority
Building: Line Maintenance Hangar
Location: Anchorage, Alaska

DRAWN BY	LMC	JOB NO.	51-9290
CHECKED BY		DATE 2/94	DWG. E09

DIAGONAL HORIZONTAL INTERCHORD BRACING MEMBERS SIZES

(A) 2L - L4" X 3" X 5/16"

(B) 2L - L3½" X 2½" X ¼"

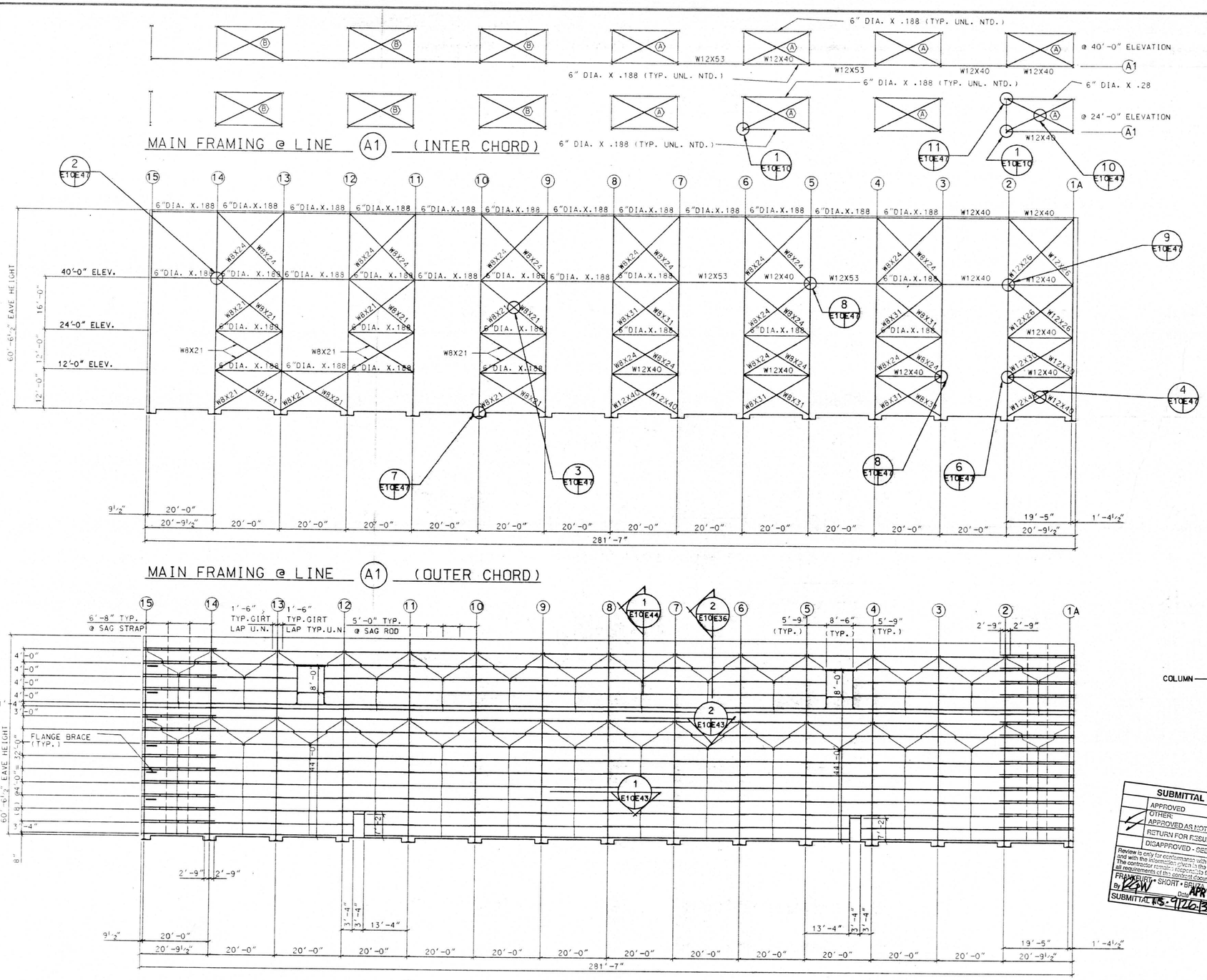

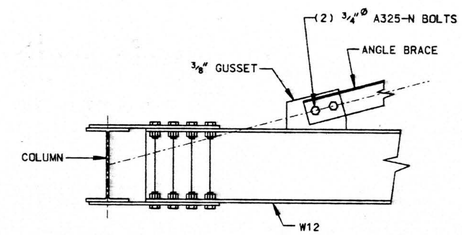

SECTION 1 (E10 E10)

SECONDARY FRAMING @ LINE (A1)

1. GIRTS - END BAYS 9.5 Z 11 GA.
   INT BAYS 9.5 Z 15 GA. BELOW 47.3'
   9.5 Z 14 GA. ABOVE 47.3'
2. ALL LAPS 1'-11½" EXCEPT AT LINES 2 & 14 WHICH ARE 2'-9"
3. ALL LAP BOLTS ½" A325 WITH WASHERS BOTH SIDES
4. DASHED LINES AT END BAYS - STD. PUNCHED STRAPPING ATTACHED TO THE INSIDE FLANGE OF THE GIRT WITH (2) #12 SCREWS
5. SAG RODS AS SHOWN ARE TYPICAL SIDEWALL BAYS (½" RODS)

* REFER TO SHEET E-43. E-44 & 45 FOR ADDITION TYPICAL DETAILS

SUBMITTAL REVIEW
APPROVED
OTHER:
APPROVED AS NOTED
RETURN FOR RESUBMITTAL
DISAPPROVED - SEE REMARKS
Review is only for conformance with the design concept and with the information given in the contract documents. The contractor remains responsible for compliance with all requirements of the contract documents.
FRANKURTY • SHORT • BRUNI ASSOCIATES, P.C.
By LPW Date APR 28 1994
SUBMITTAL NO. S-9126-3120A-02-02

STATE OF ALASKA 49TH
CHANDER P. HANDJA
CE 4640
REGISTERED PROFESSIONAL ENGINEER
MAR 24 1994

AMERICAN BUILDINGS COMPANY
Heavy Fabrication Division
Bellaire, Texas

© Copyright 1994
American Buildings Company
All Rights Reserved

NO.	REVISION	MADE	CHK'D	DATE
A	FOR APPROVAL	LMC		3/94
		LIL	85337	

Builder: Seattle Construction Services, Inc.

Owner: Alaska Industrial Development and Export Authority

Building: Line Maintenance Hangar
Location: Anchorage, Alaska

DRAWN BY	LMC	JOB NO.	51-9290
CHECKED BY		DATE 2/94	DWG. E-10